MOTOROLA

MICOM-2
HF-SSB Transceiver

Owner's Manual

68P02941C60-O

COMMERCIAL WARRANTY (STANDARD)

Motorola radio communications products are warranted to be free from defects in material and workmanship for a period of ONE (1) YEAR, (except for crystals and channel elements which are warranted for a period of ten (10) years), from the date of shipment. Parts, including crystals and channel elements, will be replaced free of charge for the full warranty period but the labor to replace defective parts will only be provided for One Hundred-Twenty (120) days from the date of shipment. Thereafter purchaser must pay for the labor involved in repairing the product or replacing the parts at the prevailing rates together with any transportation charges to or from the place where warranty service is provided. This express warranty is extended by Motorola Communications and Electronics Inc., 1301 E. Algonquin Road, Schaumburg, Illinois 60196, to the original purchaser only, and only to those purchasing for purpose of leasing or solely for commercial, industrial, or governmental use.

THIS WARRANTY IS GIVEN IN LIEU OF ALL OTHER WARRANTIES EXPRESS OR IMPLIED WHICH ARE SPECIFICALLY EXCLUDED, INCLUDING WARRANTIES OF MERCHANTABILITY OR FITNESS FOR A PARTICULAR PURPOSE. IN NO EVENT SHALL MOTOROLA BE LIABLE FOR INCIDENTAL OR CONSEQUENTIAL DAMAGES TO THE FULL EXTENT SUCH MAY BE DISCLAIMED BY LAW.

In the event of a defect, malfunction or failure to conform to specifications established by seller, or if appropriate, to specifications accepted by Seller in writing, during the period shown, Motorola, at its option, will either repair or replace the product or refund the purchase price thereof, and such action on the part of Motorola shall be the full extent of Motorola's liability hereunder.

This warranty is void if:

a. the product is used in other than its normal and customary manner;
b. the product has been subject to misuse, accident neglect or damage;
c. unauthorized alterations or repairs have been made, or unapproved parts used in the equipment.

This warranty extends only to individual products, batteries are excluded, but carry their own separate limited warranty. Because each radio system is unique, Motorola disclaims liability for range, coverage, or operation of the system as a whole under this warranty except by a separate written agreement signed by an officer of Motorola.

Non-Motorola manufactured products are excluded from this warranty, but subject to the warranty provided by their manufacturers, a copy of which will be supplied to you on specific written request.

In order to obtain performance of this warranty, purchaser must contact its Motorola salesperson or Motorola at the address first above shown, attention Quality Assurance Department.

This warranty applies only within the United States.

COMPUTER SOFTWARE COPYRIGHTS

The Motorola products described in this instruction manual may include copyrighted Motorola computer programs stored in semiconductor memories or other media. Laws in the United States and other countries preserve for Motorola certain exclusive rights for copyrighted computer programs including the exclusive right to copy or reproduce in any form the copyrighted computer program. Accordingly, any copyrighted Motorola computer programs contained in the Motorola products described in this instruction manual may not be copied or reproduced in any manner without the express written permission of Motorola. Furthermore, the purchase of Motorola products shall not be deemed to grant either directly or by implication, estoppel, or otherwise, any license under the copyrights, patents or patent applications of Motorola, except for the normal non-exclusive, royalty free license to use that arises by operation of law in the sale of a product.

MOTOROLA

Land Mobile Products Sector

MICOM-2
HF-SSB Transceiver

© Motorola Communications Israel Ltd. 1996
A subsidiary of Motorola Inc.
All rights reserved.

Land Mobile Products Sector
16 Kremenetski Street, Tel Aviv 67899

Owner's Manual

Printed in Israel, August, 1996

68002941C60-O

MOTOROLA

Land Mobile Products Sector

MICOM-2
HF-SSB Transceiver

© Motorola Inc., 1996

Motorola, Inc.
Land Mobile Products Sector
1301 E. Algonquin Road
Schaumburg, IL 60196

Owner's Manual

68002941C60-O
August, 1996

Table of Contents

Glossary ..... *v*

TECHNICAL SPECIFICATIONS **1**

General 1
Current Consumption @ 13.8 VDC 2
FCC Information 2
Transmitter 2
Receiver 3
Controls 3

MODEL COMPLEMENTS, OPTIONS & ACCESSORIES **5**

LICENSING AND SAFETY INFORMATION **7**

Safety Standards 7
Guidelines and Warnings 8
Symbols *8*
Installation Safety Warning *8*
Operational Safety Warning *8*
Restrictions *10*

INTRODUCTION **11**

MICOM-2 HF-SSB Radio Features 11
MICOM-2 Options and Accessories 11
Transmitter Features 12
Receiver Features 12
Frequency Sources 12
Power Source 13
CW Keying Operation 13
Programmable Features 13

OVERVIEW **15**

Transceiver Controls 15
Transceiver Rear Panel 17
Operating Modes 18
Status Annunciators 18
Alert Tone Indications 19
LED Indications 19

OPERATING INSTRUCTIONS 21

BASIC OPERATIONS 21
To Turn the Radio On 21
To Select the Channel 21
To Set the Frequency Deviation 21
To View a Channel Frequency 22
To Set the Display Illumination 22
To Filter the Cyclic Noise (optional) 22
TO RECEIVE 22
TO TRANSMIT 23
To Check the RF Power 23
CHANNEL SCAN 23
To Turn Scan On or Off 24
CHANGING THE BAUD RATE 24
TUNING THE ANTENNA TUNER 24

INSTALLATION 25

GENERAL 25
Government Regulations 25
Inspection 25
Radio Installation Planning 25
MOBILE INSTALLATION 25
Mobile Mounting Kit 26
DC Power Connection 26
Microphone Clip 28
Final Connections 28
External Speaker Installation 29
Operational Checks 30
BASE STATION INSTALLATION 30
CONNECTORS 31
Microphone Connector J1 31
Antenna Connector J2 31
Accessory Connector J3 31
DC Connector J4 33
VEHICULAR NOISE REDUCTION 33

MAINTENANCE **35**

INTRODUCTION 35
BUILT-IN-TEST EQUIPMENT (BITE) 35
PREVENTIVE MAINTENANCE 35
System Integrity *35*
Periodic Calibration *35*
Using BITE *35*
TROUBLESHOOTING 37
SERVICE 38
Radio Checks *39*

Index *Index-1*

Glossary

AME	Amplitude Modulation Equivalent
ARQ	Automatic Repeat Request
BITE	Built-In Test Equipment
CW	Continuous Wave
DSP	Digital Signal Processing
DTCXO	Digitally Temperature Controlled Crystal Oscillator
FEC	Forward Error Correcting
FSK	Frequency Shift Keying
GND	Ground
HF	High Frequency
LED	Light Emitting Diode
LSB	Lower Side Band
MCW	Modulated Continuous Wave
OCXO	Oven Controlled Crystal Oscillator
PEP	Peak Envelope Power
PLL	Phase Lock Loop
PTT	Push to Talk
RGC	Receiver Gain Control
RSS	Radio Service Software
RTTY	Radio Telex Teletype
SINAD	Signal to Signal Noise Distortion Ratio
SSB	Single Side Band
USB	Upper Side Band
VSWR	Voltage Standing Wave Ratio
XMIT	Transmit

Technical Specifications

General

Parameter	Value
Model Number	M70AMK0KV5_N
Frequency Range XMIT	1.6 - 30 MHz
Frequency Range RX	0.1 - 30 MHz (0.1 - 1.6 MHz reduced spec)
RF Input Impedance	50 Ohms
Number of Channels	100 SIMPLEX or HALF DUPLEX
Scanning	5 groups with up to 100 channels per group, including 1 guard channel Programmable scan rate: 1 - 5 sec. per channel, in 1 sec. steps
Frequency Stability	0.6 PPM (0.1 PPM Optional) @ -30° to 60°C
Frequency Drift (Aging)	1 PPM/year
Synthesizer Lock Time	10 msec. max
Frequency Resolution	10 Hz
Operating Temp. Range	-30° to +60°C
Storage Temp. Range	-40° to +85°C
Humidity	95% @ 50°C
Remote Control Interface	RS232C (Optional)
Modes of Operation	J3E SSB R3E PILOT H3E AME J2A CW J2B RTTY, ARQ, FEC, PACKET, MCW B8C FAX, DATA, FSK
Operating Voltage	13.8V DC ±20% Neg. ground
Dimensions	93 H x 302 W x 288 D mm 3.7 H x 11.9 W x 10.6 D inch
Weight	5.8 kg (12.8 lb)

Current Consumption @ 13.8 VDC

XMIT	**Voice (125 W P.E.P.)** **2 Tones (125 W P.E.P.)** **Single Tone**	13 Amp 22 Amp 27 Amp
Receive	**Full Audio** **Squelch**	2 Amp 1.7 Amp

FCC Information

Model Series	M7OAMKOKV5A_N
Transmitter Peak Envelope Power (P.E.P.)	125 Watts
Frequency Range	1.6 - 30 Mhz
Emissions Authorized	J3E, R3E, H3E, J2A, J2B, B8C
FCC Applicable Parts of Rules	15, 80, 90
FCC Type Acceptance Number	ABZ9QCC1635 ABZ9QCC1634 (0.1 PPM option)

Transmitter

Output Power	125W P.E.P. and average
Reduced Power Levels	25W, 62W, 100W (RSS programmable)
Audio Bandwidth	350 to 2700 Hz at -6dB
Audio Bandwidth Ripple	3 dB
Intermodulation	-31 dB/P.E.P (-35 dB/P.E.P Typical. Note 1)
Harmonic Emissions	-64 dB/P.E.P (-70 dB/P.E.P Typical. Note 1)
Spurious Emissions	-64 dB/P.E.P (-70 dB/P.E.P Typical. Note 1)
Carrier Suppression	-50 dB/P.E.P
Undesired Sideband Suppression	-55 dB/P.E.P
Audio Distortion	2.5%
1/2 Power Mic. Sensitivity	25 to 125mV (RMS)/600 Ohms
Hum & Ripple	-50 dB
Inband Noise	-60 dB (30 Hz BW)
TX/RX Switching Time	10 msec
Tx Tuning Adjustments	None

Receiver

Sensitivity (SINAD) SSB	0.5 µV for 10 dB SINAD (0.35 µV Typical. Note 1) 0.1 - 1.6 MHz with reduced performance
1/2 Rated Power Sensitivity	1 µV for 2.5W audio at speaker
Selectivity	-6 dB @ 350 to 2700 Hz -60 dB @ -1 kHz; +4 kHz
Image Rejection	-80 dB
IF Rejection	-85 dB
Undesired Sideband Rejection	-55 dB @ -1 kHz
Spurious	-80 dB
Intermodulation	-80 dB
Crossmodulation	-100 dB @ 100 kHz
Desensitization	-100 dB @ 100 kHz
Reciprocal Mixing	-100 dB @ 100 kHz
Audio Power at Speaker	5W @ 2.5% distortion
RGC Range	5 µV to 1V (2 dB change in output level)
RGC Time Constants **Voice** **Data**	 Attack time 10 msec Release time 1500 msec Attack time 10 msec Release time 10 msec
Squelch	Constant SINAD (digital)
Clarifier Range	±200 Hz
Receiver Tuning Adjustments	None
Maximum Antenna Input	20 kV transient, 100V RMS for 2 minutes

Controls

Standard and optional: volume, on/off, scroll, squelch, scan, USB/LSB, call, monitor, priority, func and accessory/programming connector.

Note 1: Values noted as "Typical" are valid over 90% or more of the frequency range.

Model Complements

FHN5769A	Hardware Assembly
FKN4345A	DC Cable
FLN2225A	Control Head Unit
FHN5767A	Control Head Hardware
FRN5766A	Control Head Board
FLN2226A	High Power Package
FHN5768A	High Power Hardware
FRN5767A	High Power Board
FLN2413A	Low RF Assembly
FHN5781A	Low RF Hardware
FHN5860A	Low RF Board
FMN1615A	Microphone MICOM-2
FHN5910A	MICOM-2 Microphone Module
HMN3596A	GM300 Microphone Kit
6802941C60	MICOM-2 Owner's Manual

Operating Options

S86	Add:	Radio Service Software (RSS) for radio programming
S135	Enhanced:	Digital Noise Blanker (recommended for mobile and fixed installations)
G478	Enhanced:	High frequency stability option
S809	Enhanced:	Interface cable kit for CW key & Headphones (Note 1)
S04	Delete:	Delete LSB operation

Mobile Station Accessories

F2265	Automatic Antenna Tuner 1.6-30 MHz, lightweight, compact housing, includes 17 foot (5.2 m) RF cable and instruction manual
FLN2272	Mobile Mounting Kit
FSN1600	External Speaker Assembly

Fixed Station Operating Options (Note 2)

S71	Delete:	Delete palm microphone
S987	Add:	RTTY/ARQ interface cable kit, radio to modem (Note 1)
S308	Add:	Phone patch interface cable kit, radio to phone patch (Note 1)
G100	Add:	Fax interface cable kit, radio to Fax modem (Note 1)
S947	Add:	Computer interface - RS232 for radio control only. Radio to computer cable kit, software package, and instruction manual are included. (Note 1)

Fixed Station Accessories

FMN1614	Desk microphone
FLN2271	Junction box for connecting up to 4 accessories in addition to CW key and Headphones. (Note 1)
FLN2294	Package kit for continuous duty Data transmission. Includes FLN2271 junction box

Service Manuals

M70AMK0KV5-N	6802941C70

Field Retrofit Kits

FKN4403	Interface cable kit for CW key & Headphones
FKN4404	Interface cable kit for Phone patch unit
FKN4405	Interface cable kit for Fax modem
FKN4406	Interface cable kit for RTTY/ARQ modem
FLN2423	Computer interface RS232
FLN2273	Spare RSS Software package

Note 1: The MICOM-2 includes one accessory port for connecting one accessory device (Phone patch, Deskset, ARQ/RTTY modem, Fax modem, Computer, or Headphones). If the simultaneous connection of two or more (up to 4 plus CW & Headphones) devices to the accessory port is required, order FLN2271 junction box listed in this page. The FLN2271 is included with FLN2294 Package kit.

Note 2: For Fixed Station Operation, order S71 (delete palm microphone), FMN1614 desk microphone, and F2369 AC power supply/charger.

Licensing and Safety Information

The FCC requires you to obtain a station license for your radio equipment before you transmit on it, but it does not require an operating license or permit. The station licensee is responsible for ensuring that the transmitted power, frequency or deviation are within the maximum limits allowed by the station license.

In addition, frequency and transmitted power of the radio must be checked before it is placed in service and rechecked periodically according to the following schedule: (1) every three months during the first year after installation, and (2) every year thereafter. The results of these checks must be recorded in a permanent log available for inspection by government personnel.

Safety Standards

The Federal Communications Commission (FCC), with its action in General Docket 79-144, March 13, 1985, has adopted a safety standard for human exposure to radio frequency electromagnetic energy emitted by FCC regulated equipment. Motorola subscribes to the same safety standard for the use of its products. Proper use of this radio will result in exposure below government limits:

The following precautions are recommended:

- **DO NOT** operate the transmitter of the mobile radio when someone outside the vehicle is within 3 feet (0.9 meter) of the antenna.
- **DO NOT** operate the transmitter of a fixed radio (base station) or marine radio when someone is within 3 feet (0.9 meter) of the antenna.
- **DO NOT** operate the transmitter of any radio unless all RF connectors are secure and any open connectors are properly terminated.
- **DO NOT** operate this equipment near electrical blasting caps or in an explosive atmosphere.
- All equipment must be properly grounded according to Motorola installation instructions for safe operation.
- All equipment should be serviced only by a qualified technician.

Guidelines and Warnings

Symbols

Warning

The Warning symbol denotes a hazard. It calls attention to a procedure or practice that could result in personal injury if not performed correctly.

Caution

The Caution symbol denotes a hazard. It calls attention to a procedure or practice that could result in damage to or destruction of part or all of the product if not performed correctly.

Installation Safety Warning

Consider the occupants' safety when you choose a location for the radio. Do not mount the radio overhead or on a side wall unless you take special precautions.

If someone were to remove the radio and does not replace it properly, then a road block could bump the radio loose and the falling radio, could in some circumstances, cause serious injury to the driver or a passenger. In a crash, even when properly installed, the radio could break loose and become a dangerous projectile.

If you have to mount the radio overhead or on a sidewall, give it the added protection of a retaining strap.

Operational Safety Warning

Warning

For vehicles equipped with a electronic anti-skid systems, see "ANTI-SKID BRAKING PRECAUTIONS" publications, Motorola No. 68P81109E34.

Warning

It is mandatory that radio installation in vehicles fueled by liquefied petroleum gas conform to the following standard:

National Fire Protection Association standard NFPA 58 applies to radio installations in vehicles fueled by liquefied petroleum (LP) gas with LP gas container in the trunk or other sealed-off space within the interior of the vehicles. The standard requires that:

1. Any space containing radio equipment shall be isolated by a seal from the space in which the LP-gas container and its fittings are located.
2. Remote (outside) fitting connections shall be used.
3. The container space shall be vented to the outside.

When planning the installation of the radio in a vehicle with one or more air bags:

Caution

VEHICLES EQUIPPED WITH AIR BAGS

An air bag inflates with great force. DO NOT place objects, including communication equipment, in the area over the air bag or in the air bag deployment area. If the communication equipment is improperly installed and the air bag inflates, this could cause serious injury.

Installation of the MICOM-2 radio should be performed by a professional installer/technician qualified in the requirements for such installations. An air bag's size, shape and deployment area can vary by vehicle make, model and front compartment configuration (e.g., bench seat vs. bucket seat).

Contact the vehicle manufacturer's corporate headquarters, if necessary, for specific air bag information for the vehicle make, model and front compartment configuration involved in your communication equipment installation.

Restrictions

Because this radio contains a transmitter, federal law prohibits unauthorized, non-licensed personnel from adjusting or maintaining it. If any operational difficulties should arise while using this product, report them to authorized service personnel as soon as possible.

Warning

Do not attempt any unauthorized modification to the radio.

Introduction

Welcome to the MICOM-2 HF-SSB radio family! Your choice of a MICOM-2 radio means you have selected the highest of standards in design, quality, and performance. This manual is design to acquaint you with the features, care, and installation of the MICOM-2 radio to better serve all your communication needs.

MICOM-2 HF-SSB Radio Features

The MICOM-2 has the following features:

- Digital Signal Processing (DSP)
- Built-in Test Equipment (BITE)
- RF power indicator
- 100 Channel capacity, simplex or half-duplex
- Channel scan
- Priority and guard channels
- Automatic IF shift
- Clarifier
- Excellent transmitter and receiver performance (as described herein)
- High frequency stability option
- Voice activated digital squelch
- Mil-Spec 810C, D and E performance
- Owner's manual including quick reference card.

MICOM-2 Options and Accessories

- 0.1 PPM frequency stability option
- Digital noise blanker
- Radio Service Software (RSS) programming package
- Continuous duty operation per US Electronic Industry Association (EIA).
- RTTY/ARQ and FAX interfaces
- Automatic antenna tuner
- Mobile mounting kit
- External speaker
- AC power supplies

- Spare boards kits
- Linear amplifier, HF modems, SSB-FM repeater unit, phone patches, large variety of mobile and base station antennas.

Transmitter Features

The maximum output power of the transmitter is 125 W PEP (Peak Envelope Power), with an average transmission duty cycle of 1 to 4, thus enabling even the CW (Continues Wave) signal to be transmitted at the maximum available power. Output power can be preprogrammed to one of the four possible levels: 25W, 62.5W, 100W and 125W. Accurate sensors are used to keep the output power within the nominal value.

The transmitter includes thermal protections. If by any reason, the transmitter internal temperature exceeds the maximum permitted temperature, the output power is automatically reduced to avoid any fault due to excessive heat and a message is displayed.

Mismatch protection is also included. If the VSWR (Voltage Standing Wave Ratio) rises more than 2:1, the transmitter will be inhibited in order to avoid any damage and a message will be displayed.

Receiver Features

The radio utilizes Digital Signal Processing for implementing most of the reception functions like demodulations, narrow filtering, automatic gain control, noise blanking, and squelch.

The automatic digital noise blanker is activated whenever repetitive noise (e.g. ignition spikes) is encountered at the received signal. The digital syllabic (speech identifier) squelch is activated whenever speech is identified, thus opening the audio path. However, if speech is not received, the audio path is muted, thus preventing background noise from disturbing the operator.

Frequency Sources

Two types of frequency sources are available for the MICOM-2 radio. The standard 1 PPM DTCXO frequency source which assures a frequency stability of better than ±30 Hz. For frequencies lower than 10 MHz, it assures a frequency stability of better than ±10 Hz.

When higher frequency stability is required, the G478 0.1 PPM OCXO frequency source can be ordered. It will assure a frequency stability of better than ±3 Hz at 30 MHz.

Power Source

The radio is designed for 13.8 V ± 20% negative-ground operation and may be connected to a standard 12 V battery.

CW Keying Operation

When the CW key is pressed, the radio transmits a continuous wave (at the full programmed power) and stops transmission when the key is released.

CW keying operation is enabled by connecting the Morse key, between CW (# pin 10 at the accessories connector), and ground (# pin 18). If you wish to operate CW keying with external headphones, the S809 Interface can be used, thus enabling a standard PL55 headphone and standard PL99 Morse key to be connected to the accessories connector.

Programmable Features

The radio can be programmed using an IBM-PC and the Radio Service Software (RSS). Using this software, the radio can be preprogrammed for the following features:

- Up to 100 simplex/half duplex channels at SSB (J3E), AME (H3E), or Pilot (R3E) modes of transmission.
- Up to four levels of output power (up to 125W PEP and average).
- Five scanning groups of up to 100 channels, each with guard channel.

For further details, refer to MICOM-2, HF-SSB Transceiver, RSS User's Guide, Motorola Publication No. 68P02942C80.

Overview

Transceiver Controls

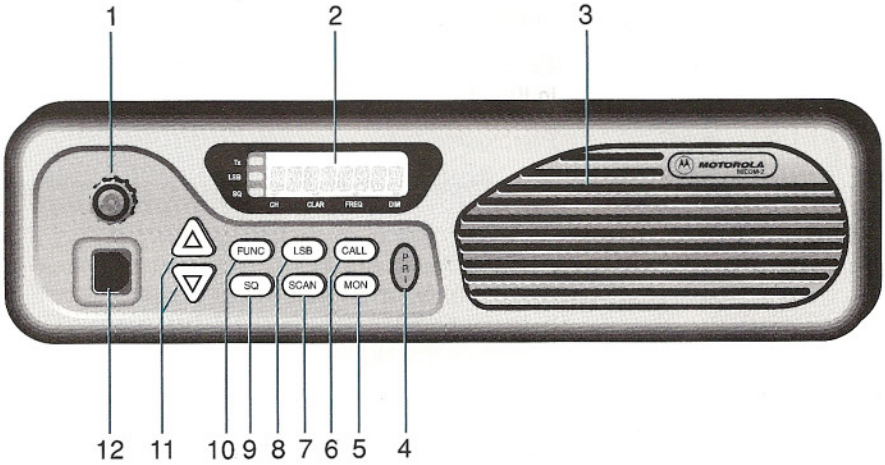

No.	Name	Description
1	ON/OFF VOLUME knob	
2	Display	The MICOM-2 has an 8-character, one-line liquid-crystal display (LCD), which displays either alphanumeric messages or feature information. Above the character display are two status annunciators that indicate some of the radio's operating conditions.
3	Loudspeaker	
4	PRI button	Terminates each temporary activity and returns to CH mode. When the radio is in CH mode, pressing PRI will move the radio to the preprogrammed priority channel.

No.	Name	Description
5	MON button	This key is active only when the selective calling mode is installed.
6	CALL button	This key is active only when the selective calling mode is installed.
7	SCAN button	Starts scanning all the preprogrammed channels in the chosen group.
8	LSB button	Enables/disables lower sideband operation.
9	SQ button	Activates/deactivates the squelch algorithm.
10	FUNC button	Changes cyclically between the following modes: CH, CLAR, FREQ, DIM and NB (optional). An arrow pointing to the selected mode appears under the character display, except for the NB mode. All modes, except CH mode are displayed for the alternate display time (1 to 10 seconds), after which the radio returns to CH mode, with the display indicating the active channel number. The alternate display time is set via the RSS.
11	UP/DOWN buttons	Scroll up/down the parameters of the mode displayed; e.g. on CHAN mode scroll the active channel numbers, on CLAR mode change the offset frequency, etc.
12	Microphone socket	

Transceiver Rear Panel

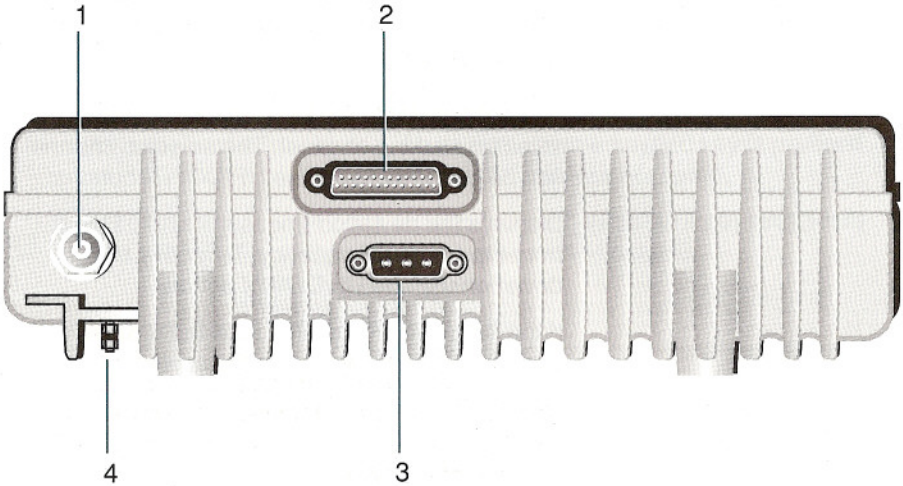

No.	Name	Description
1	Antenna socket	
2	Accessory connector (J3)	25-pin connector used to connect the radio to external accessories such as: personal computers, external modems, Morse key, etc.
3	DC connector (J4)	
4	Ground screw	

Operating Modes

The FUNC button changes cyclically between the following operating modes:

Mode	Description
CH (CHANNEL)	The default stable position. The radio displays the selected working channel. The selected channel can be changed using the UP/DOWN buttons.
CLAR (CLARIFIER)	Displays the deviation (measured in 10 Hertz) from the nominal frequency. To modify the deviation use the UP/DOWN buttons. If the set deviation is other than 0, the CLAR annunciator is displayed on the screen.
FREQ (FREQUENCY)	Displays the operating frequency. To toggle between the transmit and receive frequency on a half-duplex channel, use the UP/DOWN buttons. You can enable/disable the frequency display via the RSS.
DIM (DIMMER)	In this mode you can adjust the level of display illumination, using the UP/DOWN buttons.
NB (NOISE BLANKER) optional	Activates/deactivates the noise blanker mode, provided your radio model includes this option. To toggle use the UP/DOWN buttons.

Status Annunciators

The status anunciators indicate the status of certain radio functions:

Annunciator		Indicates
|→|	CLAR	The frequency deviation is other than 0.
♪	NB (optional)	The Noise Blanker option, when installed, is activated.

Alert Tone Indications

The MICOM-2 generates some audible tones, enabled via the RSS, to indicate radio operating conditions. The intensity of the tone, low or high, may also be set using the RSS.

Tone	Description
Valid key press:	A beep is sounded when a keypad key is pressed to indicate that the key was accepted.
PTT release:	A beep is sounded on the remote radio to indicate that the PTT button was released.

LED Indications

The three LEDs, located on the left hand-side of the display, indicate radio operating conditions:

LED	Color	Indicates
Tx	Red	Transmission.
LSB	Orange	The radio operates in LSB mode.
SQ	Yellow	The squelch is activated.

Operating Instructions

To Turn the Radio On

Turn the ON/OFF VOLUME knob clockwise until it clicks. The display shows SELF TEST for about 3 seconds. When the self test procedure is completed, the last operating mode, CH or SCAN, is activated.

If a self test failure occurs, the display will show ERROR and the number of one of the errors listed in Table 4.

To Select the Channel

Display the CH mode, then scroll to the required channel. To accelerate scrolling, press the UP/DOWN buttons continuously.

To Set the Frequency Deviation

Display the CLAR mode. Set the required deviation using the UP/DOWN buttons. The upper and lower frequency deviation limits of a channel are ±200 Hz and it is increased/decreased in steps of 10 Hz.

NOTE

The CLAR annunciator remains on display when the radio returns to channel mode, to indicate the frequency deviation is other than 0.

To nullify the CLAR deviation, scroll to zero and press FUNC or PRI to reach CH mode.

To View a Channel Frequency

Select the required channel and display the FREQ mode.

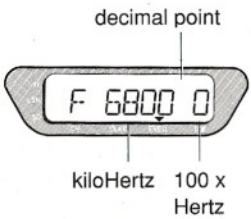

The frequency is displayed in kiloHertz, followed by a blank space indicating the decimal point and the last digit displaying hundreds of Hertz.

For a simplex channel F is appears in front of the displayed frequency.

For a half-duplex channel T(transmit) or R(receive) appear in front of the displayed frequency.

To toggle between transmission and reception, press the UP/DOWN buttons.

NOTE

If the Hide Frequency option is enabled via the RSS, the frequency will not be displayed.

To Set the Display Illumination

Display the DIM mode, then use the UP/DOWN buttons to select one out of 4 levels of illumination.

To Filter the Cyclic Noise (optional)

Display the NB mode, then use the UP/DOWN buttons to set this mode to ON.

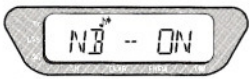

To Receive

Set the volume by turning the ON/OFF VOLUME knob clockwise.

Select the channel by pressing the UP/DOWN buttons. Continued pressing of the button will automatically scroll through the programmed channels.

To activate the squelch mode, press the SQ

button and the SQ LED will remain lit until this mode is deactivated.

To Transmit

NOTE

Before transmitting, ensure that the RF output of the radio is connected to a tuned antenna or to a dummy load.

When the channel is clear, press and hold down the Push-to-Talk (PTT) button on the side of the microphone and speak slowly and clearly. The Tx LED will remain lit until the PTT button is released to indicate that you are "on-the-air".

To Check the RF Power

When you press the PTT button, baseline bars appear on the display.

1 second after you start speaking into the microphone, vertical bars appear above the baseline bars for a period of 5 seconds. The vertical bars indicate the transmit power level.

You may check the transmit power level by whistling into the microphone. As the forward power increases the number of vertical bars increases from left to right. At 100% forward power (125W), all vertical bars appear on the display.

When the reflected power increases, some bars will be missing on the left hand side of the display.

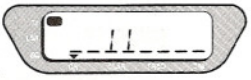

During transmission, the display changes cyclically between the vertical bars and the channel number.

Channel Scan

Up to five scan groups, A to E, may be created via the RSS, each containing up to 100 channels. When a guard channel is selected, it is monitored after every other scanned channel.

To Turn Scan On or Off

Press the SCAN button. The display shows the last scanned group. To scan a different group, press the UP/DOWN buttons.

While receiving a transmission with the SQ function activated, the radio stops scanning for 6 seconds and then it resumes scanning.

To stop scanning, press the SCAN or PRI buttons or the PTT button on the microphone.

Changing the Baud Rate

You can modify the radio serial communication baud rate via the RSS or via the radio.

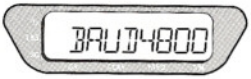

To change the baud rate from the radio, when DIM mode is displayed keep pressing the FUNC button for about 3 seconds. The baud rate is shown. Select the required value using the UP/DOWN buttons. The available values are: 9600 bps, 4800 bps, 2400 bps and 1200 bps. Press PRI to return to CH mode and update the radio's baud rate.

Tuning the Antenna Tuner

If the antenna system is equipped with an automatic antenna tuner (option F2265) and the tuner is enabled, the radio will automatically tune the antenna tuner after each channel selection. Configuring the radio to work with an automatic tuner is performed via the RSS.

To enable the ATU from the radio's panel, when DIM mode is displayed keep pressing the FUNC button for about 3 seconds. The baud rate is displayed.

Press the FUNC button again and TUNE OFF appears on the screen. Toggle to TUNE ON using the UP/DOWN buttons. Press PRI to return to CH mode.

Installation

General

This section describes the installation of the radio in a mobile or fixed station configuration.

The following paragraphs contain general installation procedures for both types of configuration.

Government Regulations

Read carefully the Licensing and Safety Information given in the front matter of this manual. Be sure that all your radio operation complies with these guidelines.

Inspection

Carefully inspect the radio immediately upon receipt, and notify the shipper of any damage incurred in transit.

Radio Installation Planning

Select the mounting location for convenience of access to electrical connections and for maintenance. The selected location should be clean, dry and well ventilated. Do not mount the unit in close proximity to strong electrical fields produced by brush motors and generators, welders, etc.

The antenna, antenna tuner and associated cable kits are provided separately. These should be installed before the radio is installed. Follow the instructions included with the units and kits.

The radio may be placed on any sturdy, flat surface. An accessory mounting tray (included in the Mobile Mounting Kit, FLN2272) allows the radio to be mounted in any position.

Before installing the radio read the entire installation procedure detailed in this section. Follow the instructions carefully.

No preliminary internal wiring connections are required before installing the radio.

Mobile Installation

Follow these procedures to install the radio in the desired location. If the accessory mounting tray is not used, ignore the steps pertaining to it.

Mobile Mounting Kit

Step 1. Mount the accessory mounting tray in the desired location. Use the tray as a template if holes must be drilled.

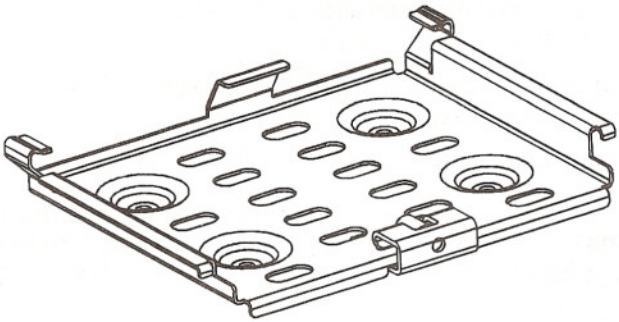

Step 2. Use the four supplied screws to fasten the mounting tray bracket to the bottom of the radio housing.

Step 3. Drill an additional hole for the ground bolt.

DC Power Connection

This paragraph describes connections to a 12-V negative-ground vehicular battery.

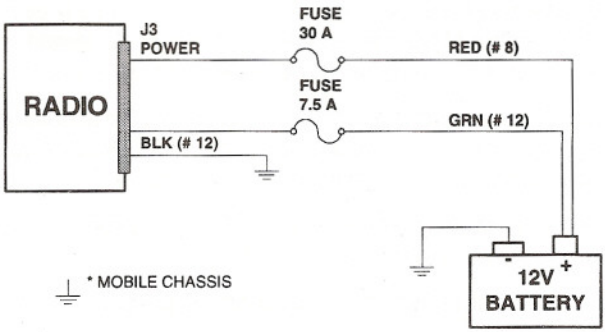

Step 1. Bring the power connector on the DC Power Cable to the radio DC connector but do not attach it to the radio. Then bring the three heavy wires (RED, GRN, BLK) to a 12-V battery, passing them through access holes as required.

NOTE

The wires must be as short as possible. They should be cut down to a minimum as required.

Step 2. Thread the ends of the red and green wires from the power connector through the two fuse holder caps. Cut apart the two fuse clips and solder or crimp them to the wires.

Step 3. Install the 30-A fuse in the fuse holder on the red wire, and the 7.5 A fuse in the fuse holder on the green wire. Then assemble the fuse holders.

Step 4. Crimp or solder the supplied lugs to the red, green, and black wires.

Step 5. Connect the lugs on the red and green cables together to the positive terminal of the battery. Then connect the lug on the black wire to the negative terminal of the battery.

NOTE

It is recommended to attach the black (ground) wire to the vehicle's chassis. The point of attachment should be located as close as possible to the radio. Refer to the figure below.

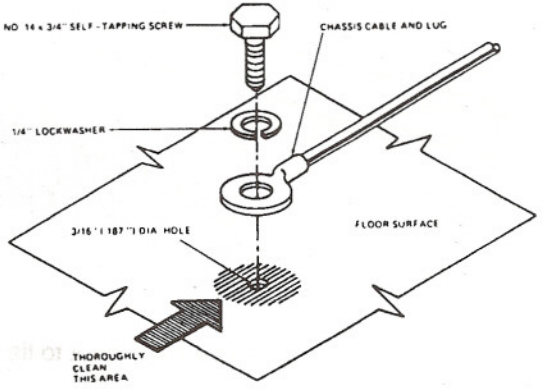

Microphone Clip

The microphone cable enables placing the microphone clip in any convenient location up to five feet from the radio. To install the clip, use it as a template to drill two holes to receive self-threading sheet-metal screws. Mount the clip using the supplied screws.

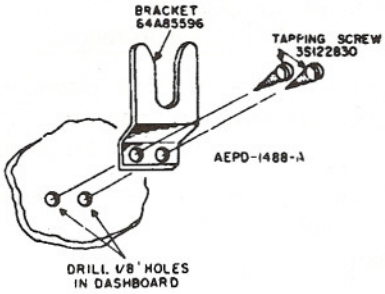

Final Connections

Step 1. Ensure that the radio is off. Then connect the power cable to DC connector J4 and connect the antenna RF cable to antenna connector J2.
If an antenna tuner is used, connect the antenna to the tuner, connect the tuner RF cable to connector J3, located on the radio rear panel.

Step 2. If the mounting tray is used, slide the radio into the tray and fasten the tray bracket with the supplied screw.

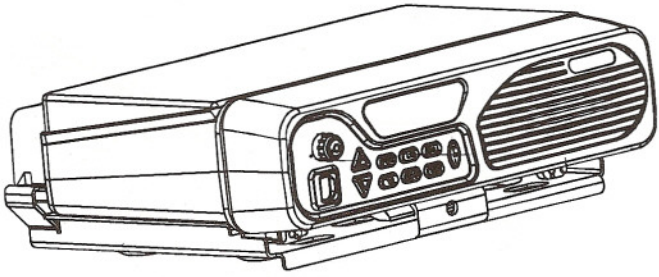

Step 3. Use the tie straps included with Cable Kit to tie loose cables out of the way.

Step 4. Connect a ground lead from the GND screw on the radio rear panel to the mobile chassis.

IMPORTANT

Special attention should be given to locating a good vehicle ground. Optimum radio performance can only be achieved with a ground connection having a very low resistance. The vehicle frame makes the best ground, but body structural reinforcement members are also suitable for grounding purposes. The ground lead should be as short as possible.

Step 5. If desired, plug an external speaker into the accessory connector. Any speaker with an impedance greater than 8 Ohms can be used.

External Speaker Installation

Connect the external 8 Ohms, 5 Watts speaker to the accessory connector (pin 1,3). The external speaker is connected in parallel to the internal speaker.

If disconnection of the internal speaker is required, perform the following steps:

Step 1. Insert a small, flat-blade screwdriver in the slotted area on the right hand-side panel of the radio and press the screwdriver towards you, to release the Control Head.

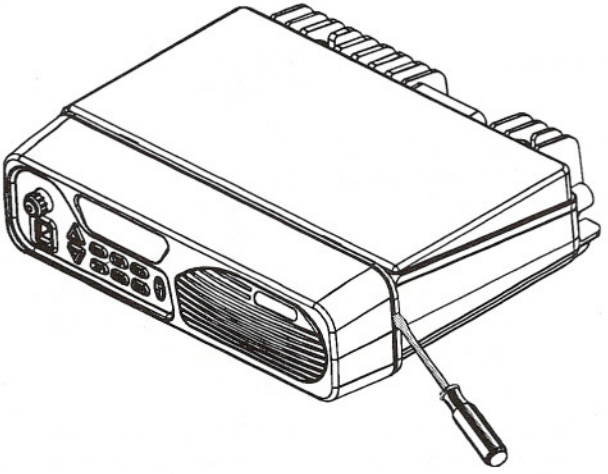

Step 2. Disconnect the internal speaker from the board.

Step 3. Return the top cover to its original position by applying pressure on both sides of the cover. Observe that the seal is correctly located.

Operational Checks

When installation is complete, carefully check all operating functions (refer to the Operation section). In case of malfunctioning, refer to Troubleshooting and Tuning the Antenna paragraphs in this manual.

Base Station Installation

In fixed station installation an AC power supply is used instead of the 12 V battery. (It is possible to connect a backup battery to the battery terminals on the power supply.) One power supply model is available:

- F2369 for 220 V AC, 50 Hz, field programmable for 110 VAC, 60 Hz.

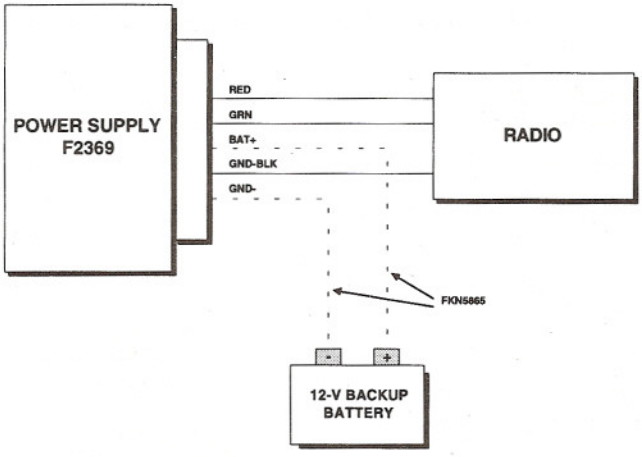

This power supply also serves as a charger for the external backup 12-V battery, if connected. When AC power failure occurs, the battery functions as the main power source. When AC power is again available, the power supply charges the battery.

The cable and connector supplied with the power supply enable connecting the supply directly to DC connector J4 on the radio rear

panel. (The DC Power Cable supplied with the radio is not used in this installation.)

Connectors

Microphone Connector J1

The microphone connector is located on the lower part of the radio front panel. Table 1 lists the functions of the microphone connector pins.

Table 1. Connector J1, Pin Connections

Pin No.	Pin Name	Description
1	SWA+	Line used to power up the microphone
2	RXD	Serial communication line
3	TXD	Serial communication line
4	GND	Ground line
5	MIC AUDIO	Input audio signals generated by the microphone (600 Ohms impedance, 100 mV 1 KHz tone is required for full output power).
6	PTT MIC	Activates transmission by short to ground.
7	MONITOR	Line which mutes the speaker before transmission is enabled (short momentary to ground to open speaker).
8	AUDIO OUT	Receive audio 600 Ohms (300 mVRMS)

Antenna Connector J2

The "N type" antenna connector is located on the rear panel of the transceiver. In transmit mode, it is used to feed the antenna with the transmit power; and in receive mode it is used to deliver the received signal from the antenna to the radio.

Accessory Connector J3

The accessory connector J3 is located on the radio rear panel. It is intended for use with external accessories such as: modem, linear amplifier, phone patch, etc.

The user can use the 25-pin D-type plug to make his own required connections or he can use the Interface cable FKN4403 (same as S809 option) when Morse key and headphones are needed to be connected by their standard connectors. Also, the user can utilize FLN2271 if he needs to connect up to four devices. Table 2 lists Connector J3, Pin Connections.

Table 2. Connector J3, Pin Connections

Pin No.	Pin Name	Description
1	SPKR-	Differential output to the external 8Ω, 8W speaker.
2	SPARE	
3	SPKR+	Differential output to the external 8Ω, 8W speaker.
4	RX AUDIO+	Differential output received audio signals (0 dBm; 600Ω; not controlled by volume).
5	RX AUDIO-	Differential output received audio signals (0 dBm; 600Ω; not controlled by volume).
6	TX AUDIO+	Differential input received audio signals (600Ω input impedance, -9 to 0 dBm is required for full power).
7	TX AUDIO-	Differential input received audio signals (600Ω input impedance, -9 to 0 dBm is required for full power).
8	PTT_IN VOICE	Transmission command (by short to ground) for voice signals.
9	PTT_IN DATA	Transmission command (by short to ground) for data signals.
10	PTT_IN CW	Transmission command (by short to ground) for CW (Morse) signals.
11	SWA+	13.8V (nominal) current limited.
12	KW_C_C	KW option channel change
13	KW_ON/OFF	KW option power ON/OFF.
14	AGC FAST/SLOW	AGC fast or slow release.
15	RXD	Point to point communication line to HOST/HLC.
16	TXD	Point to point communication line to HOST/HLC.
17	RESET	External RESET.
18	GND	Ground
19	KW PTT	KW PTT
20	EXT_ALARM	External Alarm Operation (open collector -pulled to ground when external alarm is activated.
21	VPP	Flash programming voltage
22	KW_ALC	KW_ALC
23	SQ_GATE	Squelch Indication
24	FAN ON/OFF	FAN ON/OFF
25	KW TUNE	KW tune

DC Connector J4

The DC connector J4 is mounted on the rear panel of the radio. It is used to feed the radio with the required power from AC power supply or from the battery. The following table lists the function of the DC connector lines.

Table 3. Connector J4, Pin Connections

Pin No.	Pin Name	Description
1	TX POWER	Used to deliver high currents to the radio up to 28 Amp, mainly for the transmitter circuitry
2	Ground	Used as return line for receive and transmit lines
3	RX Power	Used to deliver relatively low currents to the radio up to 3 Amp, mainly for the receiver circuitry

Vehicular Noise Reduction

Most vehicles are subject to several noise sources which greatly disturb a received signal. The most noisy sources are the high voltage ignition sparks that are produced at the vehicle's plugs. The second is the alternator activity.

In keeping with the following insulation practices and if necessary by adding some damping components, it may be possible to reduce these noises to a tolerable level.

1. Keep your antenna tuner and antenna as far as possible from the engine compartment.
2. Connect the primary power lead of the radio directly to the battery instead of the starter relay. The battery acts as a large capacitor (about one farad for 50 Amp capacity batteries) by passing the noise to ground.
3. If necessary, connect 0.01 - 0.1 micro farad capacitors across the primary leads of the coil and across the alternator output.
4. Keep your DC and RF cables as short as possible.
5. If your vehicle does not have a resistive ignition wire, it is recommended to replace it with a such a wire.
6. The MOTOROLA RF noise reduction kit for alternator equipped vehicles (TLN8845) includes some useful accessories for noise reduction. Among them being the resistive ignition coil suppresser cable. In severe noise conditions, you may find this kit helpful.

Maintenance

Introduction

This section provides maintenance information for the user of the MICOM-2 Radio. By carrying out the installation procedures correctly and following the maintenance instructions properly, you ensure continual operation of your radio set.

Built-In-Test Equipment (BITE)

When an internal problem appears or is suspected, the MICOM-2 internal BITE will assist the user to locate the source of this possible problem and inform the service shop or dealer accordingly.

Preventive Maintenance

System Integrity

Periodically check the integrity of your system, check the power source, cables, coaxes, connectors, antenna tuner (if exists) and antenna. Carefully check that no damage has been caused to your cables, pay extra attention to runway through holes and bent cables.

Periodic Calibration

To keep the frequency accuracy of your radio, it is required to calibrate its internal frequency source after the third, sixth and twelfth month, and yearly thereafter. Please ensure that your radio is calibrated on time.

Using BITE

Every time the radio is turned on, a self test procedure is being activated. If an internal malfunction is found, an error message will be displayed. Please contact your service shop or dealer and inform him about the trouble indicated by BITE. The potential errors are:

Table 4. Error Messages

Error No	Description
01	DSP boot checksum fail (download)
02	DSP PLL unlock

Continued

Error No	Description
03	DSP external RAM memory
04	Not applicable
05	DSP internal RAM memory
06	Not applicable
07	Not applicable
08	HC16 flash memory checksum
09	HC16 RAM memory
10	No 16.8 MHz clock
11	Battery low
12	Control head wake-up
13	Control head is not responding
14	Radio not programmed
15	Database fail

Troubleshooting

In case of malfunctioning, refer to the following table:

Table 5. User Troubleshooting Chart

Problem	Troubleshooting
Blank Display	CHECK • DC power cable is connected properly to the radio and battery. • A 7.5A fuse is installed in the fuse holder located on the green wire of the DC power cable.
Display present but weak or no receive signal or noise	CHECK • Connection of antenna to antenna tuner and antenna tuner to radio cables (loose or broken connections) • Squelch position OFF. • Correct programming of operating channel (frequency, mode of operation, etc).
Engine noise picked up by the antenna	Determine by observing difference in the reception by turning the Engine ON/OFF. ENSURE • Ground leads are properly connected, all power wires and ground leads are as short as possible • That Noise Blanker (if installed) is enabled. • Install noise reduction Kit TLN8845.
Poor or no transmission	CHECK • That a 30A fuse is installed in the fuse holder located on the red wire of the power cable. • That proper grounding cables are connected from the radio and from the antenna tuner to the vehicle chassis. • While speaking, check RF power bars for activity. The resultant RF power output is displayed in approximately 15 W increments (bars) being added from left to right. • If three or more left-hand bars disappear, there may be a problem in the antenna system. If antenna cabling, antenna mast rigging position has changed since the antenna was last tuned, the antenna tuner will not be adjusted automatically. To retune the antenna tuner, scroll to the next channel and thereafter scroll back. If this procedure does not correct the situation, inspect the tuner, antenna and ground plane for loose connections or misplaced parts. If no loose connections are found, call the nearest Motorola technician or service facility for assistance. • If bars are missing on the right side of the RF power bar graph, it indicates low transmitter power, which can be caused by a faulty microphone, faulty transmitter, overheating, or defective antenna system.

In case of a failure during operation, the following messages appear on the radio's display:

Table 6. Failure Messages

Message	Troubleshooting
NO CLOCK	CHECK • That a 30A fuse is installed in the fuse holder located on the red wire of the power cable.
SYN FAIL	Perform a built-in test via the RSS, to obtain more information.
PW_LATCH	Perform a built-in test via the RSS, to obtain more information.
OVER TMP	CHECK • That there is no fan obstruction. • Perform a built-in test via the RSS, to obtain more information.
CU-LIMIT	CHECK • That the radio is programmed to TUNER OFF when your antenna system is not equipped with an ATU. • If a short circuit occurred in the antenna's coax. • That the ATU is in working condition.

Service

Proper repair and maintenance procedures will assure efficient operation and long life for this product. A Motorola maintenance agreement will provide expert service to keep this and all other communication equipment in perfect operating condition. Through its maintenance and installation program, Motorola makes available the finest service to those desiring reliable, continuous communications on a contract basis.

Motorola's Customer Service Division is the largest service organization specializing in mobile communications. It includes over 900 authorized or company-owned stations. In addition, our products are serviced throughout the world by a wide network of company or authorized independent distributor service organizations. For a contract service agreement, please contact your nearest Motorola service representative, or Motorola sales representative. If you suspect a radio problem, check the following items before requesting service.

Radio Checks

- Be sure the radio is turned on.
- Replace or recharge the battery. The first time a new battery is used, it should be charged for at least 16 hours.
- The antenna must be screwed on properly, with its base flush against the top of the radio.
- Could your radio problem be caused by accessories improperly connected?
- Try operating the radio from several different locations, especially when using the radio inside buildings.

Index

—A—

accessories, 11
accessory connector, 17, 31
alert tone indications, 19
annunciators, 18
  CLAR, 18
  NB, 18
antenna
  connector, 31
  tuner, 24

—B—

base station installation, 30
basic operations, 21
baud rate, 24
BITE, 35
button
  CALL, 16
  FUNC, 16
  LSB, 16
  MON, 16
  ON/OFF VOLUME, 15
  PRI, 15
  SCAN, 16
  SQ, 16
  UP/DOWN, 16

—C—

calibration, 35
CH mode, 18
changing the baud rate, 24
channel scan, 23
checking the RF power, 23
CLAR mode, 18
connector
  accessory, 17, 31
  antenna, 31
  DC, 17, 33
  microphone, 31
CW keying, 13

—D—

DC connector, 33
DC power connection, 26
DIM mode, 18

—E—

error messages, 35
external speaker, 29

—F—

failure messages, 38
features, 11
  programmable, 13
  receiver, 12
  transmitter, 12
filtering noise, 22
FREQ mode, 18
frequency sources, 12

—I—

installation, 25
  base station, 30
  mobile, 25

—L—

LED indications, 19
licensing, 7

—M—

maintenance, 35
messages
  error, 35
  failure, 38
microphone
  socket, 16
  clip, 28
  connector, 31

mobile installation, 25
mode
  CH, 18
  CLAR, 18
  DIM, 18
  FREQ, 18
  NB, 18
model complements & accessories, 5
mounting kit, 26

—N—

NB mode, 18
Noise Reduction, 33

—O—

operating modes, 18
options, 11

—P—

planning the installation, 25
power source, 13
preventive maintenance, 35
programmable features, 13

—R—

receiver features, 12
receive, 22
restrictions, 10
RSS, 13

—S—

safety standards, 7
scan, 23
selecting a channel, 21
service, 38
setting
  frequency deviation, 21
  illumination, 22
speaker, external, 29
status annunciators, 18

—T—

technical specifications, 1
transceiver
  controls, 15
  rear panel, 17
transmit, 23
transmitter features, 12
troubleshooting, 37
tuning the antenna tuner, 24
turning on, 21

—V—

viewing the frequency, 22

—W—

warnings, 8

68P02941C60-O